From Impedance to Insight: Recovering Extended Thiele–Small Parameters with One-Shot Measurement

Ivan Rodionov

Abstract

We present a unified, open-source framework that recovers a loudspeaker's extended Thiele–Small parameters from a single impedance measurement—no iterative guesswork, no expensive hardware. By combining a clean algebraic formulation with practical Python measurement and MATLAB fitting, we turn a simple impedance curve into a complete transducer model, ready for simulation and design.

Bill of Materials: The impedance measurement setup used a 22 Ohm 1% 0.25 watt metal film sense resistor (generic), Realtek sound card (generic), and a generic 6-inch test loudspeaker driver. Cables were standard 3.5 mm TRS and alligator clips. All software written is open source and available on GitHub

1 Transducer, Parameter and Observation Space Overview

The purpose of a loudspeaker is to transduce an electrical signal into an acoustic field. The vast majority of electroacoustic transducers employ a moving-coil architecture, in which a current-carrying conductor (voice coil) is immersed in a static magnetic field generated by a permanent magnet assembly. The resulting Lorentz force drives a mechanically compliant, damped diaphragm, whose motion is coupled to the surrounding medium as an acoustic pressure field.

Transducer as a Morphism

This transducer defines a morphism between the parameter space P and the observation space O:

$$\mathcal{T} : P \longrightarrow O$$

1. Parameter Space P

The parameter vector is

$$p = (\mathrm{Re}, L_e, B\ell, R_{\mathrm{ms}}, M_{\mathrm{ms}}, C_{\mathrm{ms}}, S_d, \rho, c),$$

with typical values and explanations:

$\mathrm{Re} = 6\ \Omega$,	voice coil DC resistance
$L_e = 0.29 \times 10^{-3}$ H,	voice coil inductance
$B\ell = 10$ N/A,	motor strength
$R_{\mathrm{ms}} = 2.0$ Ns/m,	mechanical damping of cone
$M_{\mathrm{ms}} = 10.4 \times 10^{-3}$ kg,	moving mass of cone + coil
$C_{\mathrm{ms}} = 77 \times 10^{-6}$ m/N,	mechanical compliance of suspension
$S_d = 132 \times 10^{-4}$ m^2,	cone area affecting air coupling
$\rho = 1.2$ kg/m^3,	air density
$c = 343$ m/s,	speed of sound in air

Formally, the parameter space can be viewed as a product of one-dimensional affine spaces with units:

$$P \cong \prod_{i=1}^{9} \mathbb{R}_{>0}^{(u_i)},$$

where each u_i denotes the physical unit of the corresponding parameter.

2. Observation Space O

The transducer maps parameters to observable outputs.

Electrical measurement: functions representing electrical transfer, e.g., resistance or impedance.

Mechanical measurement: elements of the jet bundle of the displacement field

$$j^\infty X(t) = (X, V, A, J, \dots)$$

capturing positions, velocities, accelerations, jerks, etc.

Acoustic measurement: pressure $p(t)$, typically analyzed in $L^2(\mathbb{R})$ or Laplace/Fourier spaces.

Collectively, these outputs define the observation space:

$$O \subset \underbrace{\mathcal{F}(\mathbb{R}, \mathbb{R})}_{\text{Electrical Functions}} \times \underbrace{J^\infty(\mathbb{R}, \mathbb{R}^m)}_{\text{Mechanical Jet Bundle}} \times \underbrace{L^2(\mathbb{R}) \text{ or Laplace}}_{\text{Acoustic Functions}}$$

Most commonly, these functions are treated as objects in the Laplace (or Fourier) category, i.e., analyzed under linear, frequency-domain transforms.

3. Combining Transducers

Let $\mathcal{T}$ denote the set of transducers. Each transducer T has associated electrical, mechanical, and acoustic characteristics, represented as transfer functions, impedances, or other operators in the appropriate domain (time, frequency, or Laplace). We define operations on $\mathcal{T}$ that correspond to physically connecting multiple transducers or loading them with enclosures.

Electrical Combinations

For transducers connected electrically, the total electrical response is determined by standard circuit laws. Define binary operations on $\mathcal{T}$:

Series connection: $T_1 \oplus T_2$ is the transducer formed by connecting T_1 and T_2 electrically in series. The resulting electrical transfer characteristic R satisfies

$$R_{T_1 \oplus T_2} = R_{T_1} + R_{T_2},$$

where addition is understood in the appropriate function space (pointwise for frequency-domain representations, convolution for time-domain impulse responses, etc.).

Parallel connection: $T_1 \otimes T_2$ is the transducer formed by connecting T_1 and T_2 electrically in parallel. The resulting electrical transfer characteristic satisfies

$$R^{-1}_{T_1 \otimes T_2} = R^{-1}_{T_1} + R^{-1}_{T_2},$$

where the operations are again interpreted in the relevant algebraic structure (e.g., pointwise inversion and addition in the frequency domain).

These operations are commutative and associative. Together with the trivial transducer T_{short} (zero transfer, acting as identity for $\oplus$) and T_{open} (infinite transfer, acting as identity for $\otimes$), the pairs $(\mathcal{T}, \oplus)$ and $(\mathcal{T}, \otimes)$ form commutative monoids. The two operations interact via distributivity laws familiar from circuit theory:

$$(T_1 \oplus T_2) \otimes T_3 = (T_1 \otimes T_3) \oplus (T_2 \otimes T_3),$$

reflecting that series and parallel combinations distribute over each other.

Mechanical Combinations

Mechanical combinations—such as mounting two drivers in isobaric configuration or coupling multiple cones to a common air load—follow analogous rules for mechanical transfer characteristics. For isobaric (series) loading, where two drivers share a sealed volume between them, the mechanical displacements add:

$$X_{\text{series}} = X_1 + X_2,$$

while for parallel-coupled cones moving in phase, the forces add. In general, these combinations introduce constraints such as equal volume velocity or shared enclosure compliance, and can be treated as operations on the mechanical transfer space.

Enclosure Loading

Enclosures modify the acoustic load seen by the driver. These can be viewed as operations mapping a bare driver to a loaded system:

$$\begin{aligned} T_{\text{sealed}} &= \mathcal{L}_{\text{sealed}}(T), \\ T_{\text{ported}} &= \mathcal{L}_{\text{ported}}(T), \\ T_{\text{horn}} &= \mathcal{L}_{\text{horn}}(T), \end{aligned}$$

where each $\mathcal{L}$ transforms the acoustic transfer characteristic at the driver's radiating surface.

Collectively, these operations define a compositional structure on $\mathcal{T}$ that mirrors the physical way loudspeaker systems are constructed: drivers are combined electrically and mechanically, then loaded with enclosures to produce a complete system.

2 Forward and Inverse Problems

In practice, working with electroacoustic transducers involves two complementary computational tasks, which formalize the transducer morphism $\mathcal{T} : P \to O$ introduced in Section 2:

Forward Simulation Given a complete set of transducer parameters (Thiele–Small parameters plus extended quantities such as voice-coil inductance and frequency-dependent radiation), predict the system's response. Typical outputs include sound pressure level (SPL), electrical impedance, mechanical displacement, and efficiency.

Inverse Parameter Extraction Given a limited set of observations—most commonly a simple electrical impedance measurement—recover the underlying parameters in a single step. This enables full characterization from minimal measurements, essential for calibration, model validation, and design optimization.

Mathematically, these tasks correspond to a mapping from the parameter space P to the observation space O (forward) and its inversion (inverse). Both are treated within a unified algebraic framework.

2.0.1 Forward Simulation

The forward problem is naturally expressed in a categorical setting. Let **Op** denote the category whose objects are linear differential and integral operators (e.g., $\frac{d}{dt}$, $\int$, fractional operators) and whose morphisms are transformations between them (e.g., the Laplace transform). The Laplace (or Fourier) transform defines a functor

$$\mathcal{L} : \mathbf{Op} \longrightarrow \mathbf{Mult},$$

where **Mult** is the category of multiplication operators on functions of a complex variable. This functor maps differentiation to multiplication by s, integration to multiplication by $1/s$, and convolution to pointwise multiplication.

A loudspeaker transducer is described by a composition of such operators, forming an object in **Op**. Under $\mathcal{L}$, the entire system becomes a collection of algebraic equations in **Mult**, which is trivially solvable. Well-posedness follows from the properties of the transform together with the physical constraints of passivity and causality: for each parameter vector $p \in P$, there exists a unique solution that depends continuously on p.

Observables such as sound pressure level (SPL), electrical impedance, mechanical displacement, and efficiency are obtained systematically by evaluating the algebraic expressions.

Radiation loading—which depends on the geometry of the diaphragm and enclosure—is incorporated through a frequency-dependent radiation impedance $Z_{\text{rad}}(\omega)$. For simple geometries (e.g., a piston in an infinite baffle) this impedance admits an analytic form; for arbitrary shapes we compute it numerically using boundary element methods (BEM). The resulting $Z_{\text{rad}}(\omega)$ is a multiplication operator in the frequency domain and thus fits directly into the **Mult** framework.

In categorical terms, the forward simulation defines a functor

$$\mathcal{F} : \mathbf{Par} \longrightarrow \mathbf{Obs},$$

where **Par** is a discrete category whose objects are parameter vectors $p \in P$, and **Obs** is a category whose objects are observable functions (e.g., impedance $Z(\omega)$, SPL, displacement) with pointwise multiplication as morphisms. The functor $\mathcal{F}$ maps each parameter vector to the corresponding observables, preserving the algebraic structure of series and parallel connections defined in Section 3.

2.0.2 Inverse Simulation

The inverse problem seeks to reconstruct the parameter vector $p \in P$ from observations in O. Formally, this is a question of *identifiability*: given a sufficiently rich set of outputs, each transducer parameter is uniquely determined.

A critical practical consideration is which observable to use. The electrical impedance $Z(\omega)$ provides the most precise and robust information, as it can be measured with high signal-to-noise ratio using simple equipment (e.g., a soundcard and a series resistor). Other outputs—displacement, SPL—are derived quantities and do not need to be treated as independent regularizers.

With the system identifiable from $Z(\omega)$, the inverse problem reduces to a nonlinear least-squares optimization over the parameter space:

$$\hat{p} = \arg\min_{p \in P} \sum_{\omega} \left| Z_{\text{measured}}(\omega) - Z_{\text{model}}(\omega; p) \right|^2,$$

where $Z_{\text{model}}(\omega; p)$ is the predicted impedance for parameter vector p. In practice, the problem may be ill-conditioned; therefor a regularizer can be used (e.g., Tikhonov regularization or parameter bounds) to ensure stability and uniqueness of the solution.

Conceptually, the inverse problem corresponds to a mapping $O \to P$. While this mapping is not a functor in the same sense as the forward problem (it involves optimization and may be multi-valued), it is well-defined when identifiability holds.

2.0.3 Existing Tools and Motivation

For the forward problem, surprisingly few robust open-source implementations exist. Many existing treatments neglect key physical contributions—most commonly the voice-coil inductance—or oversimplify radiation loading (treating it as constant or zero), leading to nonphysical predictions at high frequencies. Well-validated implementations, when available, are often locked in proprietary software or obscure toolboxes.

The inverse problem is in an even worse state. Existing methods frequently rely on ad hoc parameter perturbations (such as adding mass or changing enclosure loading) or heuristic assumptions, producing unreliable results. Competent open-source solvers are virtually nonexistent, and commercial alternatives are often costly or closed.

This motivates our approach: a systematic, algebraically well-posed framework for both forward and inverse simulations, designed to be transparent, reproducible, and—most importantly—open source and forkable.

3 Implementation Overview

The complete source code is available at https://github.com/theIvanR/speakeasy.

3.1 Practical Forward Problem Solution

The forward solver is implemented in `simulate_speaker_full.m`. It defines a systematic map from the transducer parameters and configuration settings to the corresponding electrical, mechanical, and acoustic responses over a prescribed frequency grid.

Inputs to the forward solver include the parameter vector $p = (\mathrm{Re}, L_e, B\ell, R_{\mathrm{ms}}, M_{\mathrm{ms}}, C_{\mathrm{ms}}, S_d, \rho, c)$, the driver configuration (`'single'`, `'series'`, or `'parallel'`, including ideal isobaric combinations), the enclosure model (type: infinite baffle, sealed with box volume V_b; and optional damping α), and a logarithmically spaced frequency grid. Three radiation models are available: a constant low-frequency approximation (simplified piston), the exact baffled piston solution using Bessel functions for an infinite baffle, and a numerical ring-BEM formulation (the default) for arbitrary geometries.

The outputs consist of sound pressure level at a reference distance, mechanical displacement and velocity, electrical and acoustic power together with overall efficiency, impedance magnitude and phase, and the resonance frequency updated self-consistently for sealed-box configurations with frequency-dependent radiation mass. Optional visualization modes include `'reduced'` (a combined panel showing SPL, displacement, efficiency, and impedance) and `'full'` (separate figures for each observable).

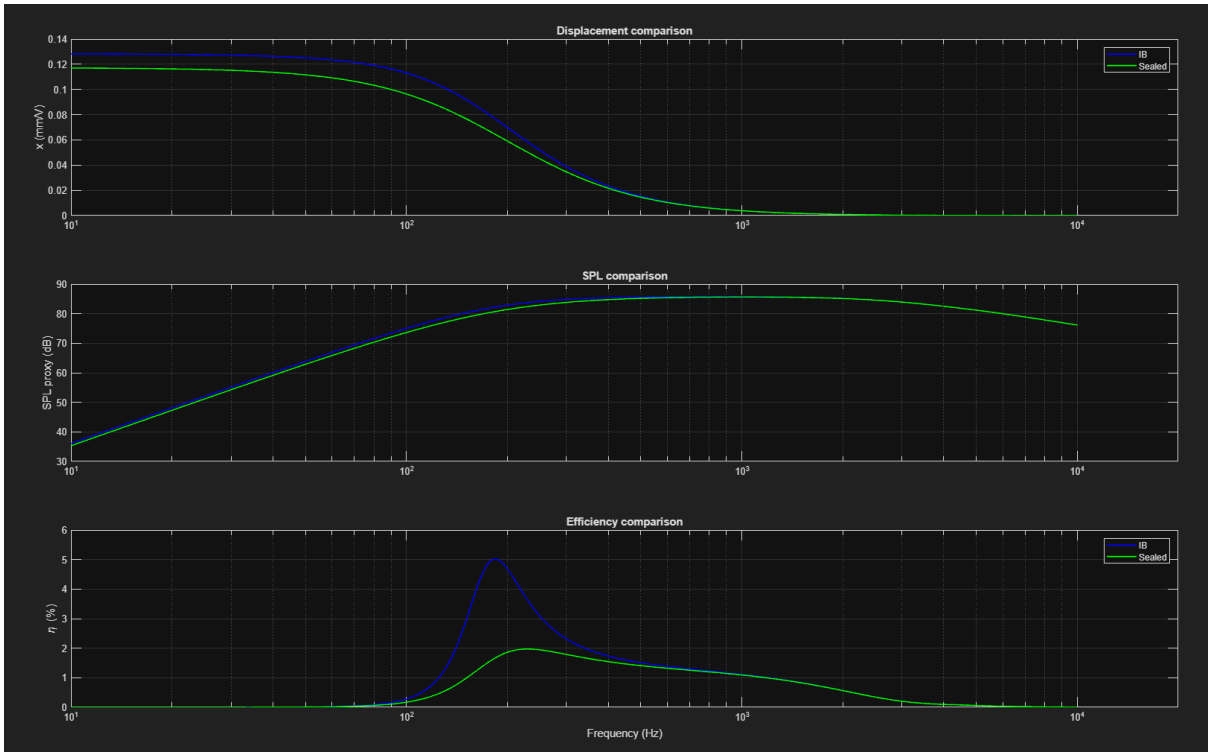

Figure 1: Reduced Plot showing Displacement, SPL, Efficiency of a example transducer in a IB and sealed enclosure

3.2 Practical Inverse Problem Solution

3.2.1 Impedance Measurement (Python)

A Python class `BodePlotter`, built on top of `sounddevice`, is used to perform the impedance measurement. The system excites the device under test using band-limited white noise, allowing all frequencies to be probed simultaneously while enabling spectral averaging via Welch's method. During acquisition, two channels record the voltage across the sense resistor and the driver, respectively. From these signals, the transfer function $H(\omega) = V_{\mathrm{DUT}}/V_{\mathrm{src}}$ is estimated using Welch's method, which is then used to compute the impedance as $Z_{\mathrm{DUT}}(\omega) = R_{\mathrm{sense}} \frac{H(\omega)}{1-H(\omega)}$. To ensure measurement reliability, the coherence $\gamma^2(\omega)$ is evaluated and frequency bins with low coherence are discarded. The resulting data are saved to a CSV file, and the measurement duration can be adjusted to trade off between acquisition time and statistical accuracy.

Fig. 2 shows the practical measurement setup, while Fig. 3 presents a representative impedance curve obtained using this method.

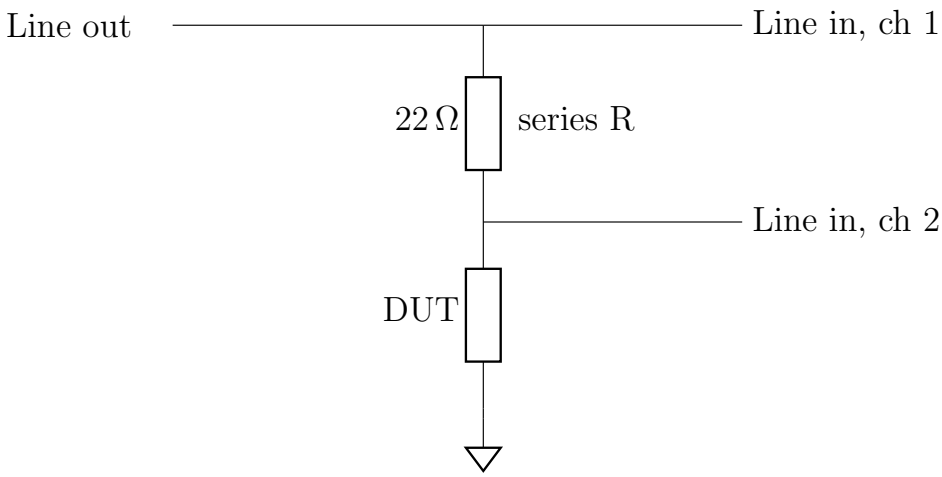

Figure 2: Soundcard-based impedance measurement setup using a series sense resistor.

The sense resistor R_{sense} must be chosen to avoid overloading the soundcard (which causes harmonic distortion and intermodulation) while keeping the voltage drop across it above the noise floor. To guarantee that the total load seen by the soundcard's output stays above its rated minimum load resistance, a practical guideline is:

$$R_{\mathrm{sense}} \approx \max\bigl(R_{\mathrm{soundcard,\ out,\ min}},\ R_{\mathrm{DUT,\ typ}}\bigr),$$

where $R_{\mathrm{soundcard,\ out,\ min}}$ is the soundcard's minimum output load resistance (a real value), and $R_{\mathrm{DUT,\ typ}}$ is the magnitude of the DUT's current-to-voltage transfer function interpreted as a generalized resistance (no LTI assumption required). For loudspeaker measurements, $22\,\Omega$ is a good starting point, as it keeps the aggregate load safely above typical soundcard ratings even when the speaker is nearly a short.

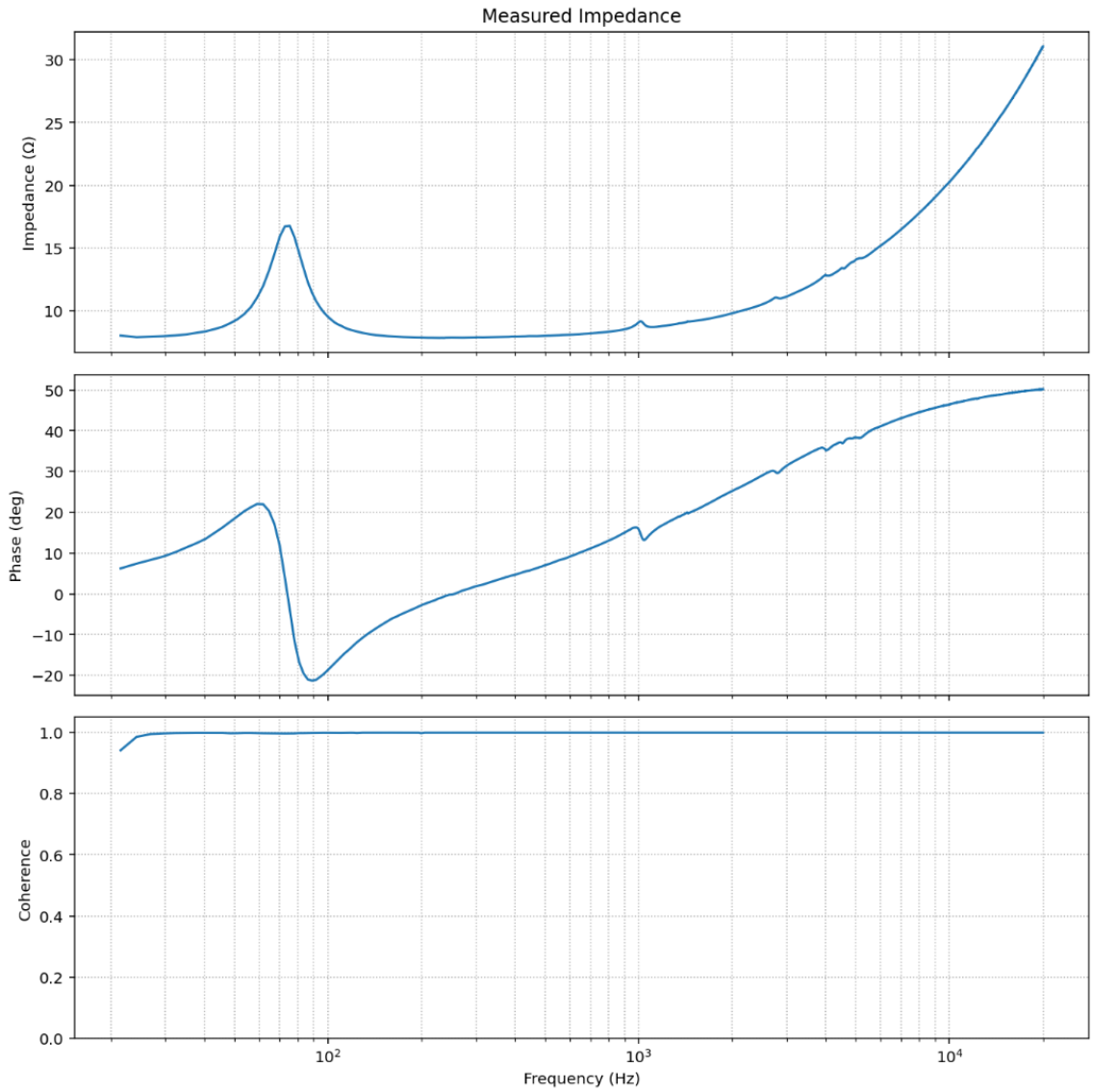

Figure 3: Measured impedance (Bode plot) of a 6” test transducer.

The measured response exhibits the expected structure: a pronounced resonance peak corresponding to the electromechanical system, followed by a gradual transition to inductive behavior at higher frequencies. These features directly encode the underlying Thiele–Small parameters and form the basis of the inverse problem addressed in the following section.

3.2.2 Parameter Fitting (MATLAB)

The inverse problem recovers the Thiele–Small parameters of a loudspeaker driver from a measured electrical impedance curve using nonlinear least squares in a one-shot measurement from an input CSV Bode plot file.

Inputs to the fitting routine include a CSV file with columns for frequency in hertz, impedance magnitude in ohms, impedance phase in degrees, and coherence. Data-cleaning parameters such as coherence threshold, frequency range, and downsampling stride are applied. An initial parameter guess `p0` (based on a similar driver) is required, together with the driver configuration (single, series, or parallel) and an optional sealed enclosure. The outputs are a fitted parameter structure, the residual norm, estimated resonance features, and a diagnostic plot.

The routine `fit_speaker_params` begins by discarding rows where coherence falls below a threshold or frequencies lie outside the selected band, with optional decimation. From the cleaned data it extracts resonance frequency f_s, peak impedance Z_{peak}, DC resistance R_e, coil inductance L_e, and total Q Q_{ts}, which provide initial guesses for Q_{ms}, Q_{es}, R_{ms}, $B\ell$, and M_{ms}. Five parameters (R_e, L_e, $B\ell$, R_{ms}, M_{ms}) are then optimised in logarithmic space using `lsqnonlin` with a weighted complex residual cost function:

$$r = \begin{bmatrix} \frac{\Re(Z_{\text{model}} - Z_{\text{meas}})}{\sigma} w \\ \frac{\Im(Z_{\text{model}} - Z_{\text{meas}})}{\sigma} w \end{bmatrix}, \quad \sigma = \max(|Z_{\text{meas}}|, 0.25R_e), \quad w = \max(\text{coherence}, 0.05),$$

and compliance is updated as $C_{\text{ms}} = \frac{1}{(2\pi f_s)^2 M_{\text{ms}}}$. Finally, a figure overlays the measured and fitted impedance magnitude and phase for visual inspection.

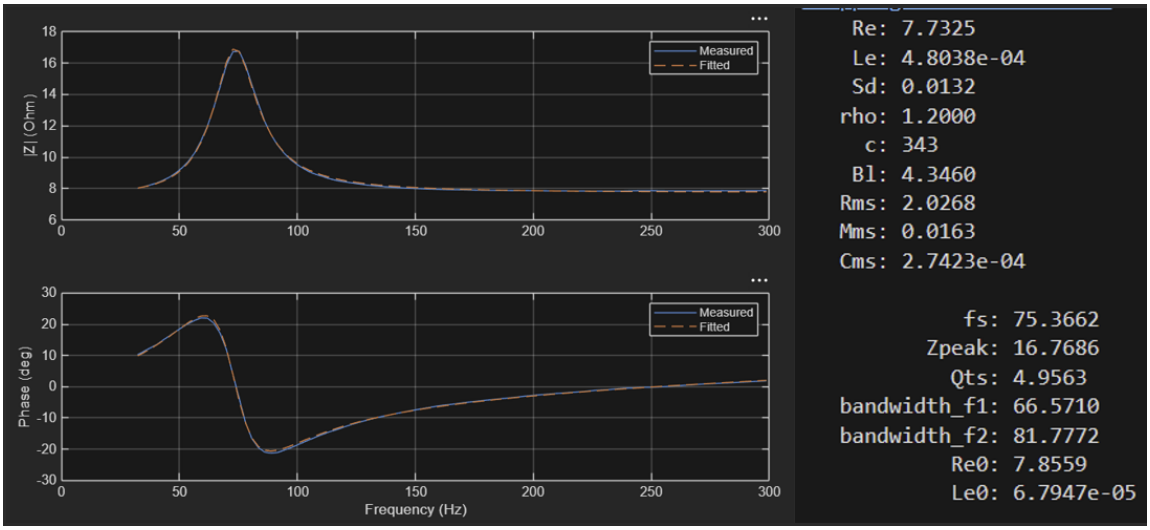

Figure 4: Recovered TS and fit of a 6” test transducer.

4 Modularity and Extensions

The framework is built to be easily extended. All code is open source, well-documented, and forkable. Designed to be a solid foundation for both education and advanced loudspeaker research.

References

[1] R. H. Small, "Closed-box loudspeaker systems, Part I: Analysis," *J. Audio Eng. Soc.*, vol. 20, no. 10, pp. 798–808, 1972.

[2] L. L. Beranek and T. Mellow, *Acoustics: Sound Fields and Transducers*. Oxford: Academic Press, 2012.

[3] F. W. Lawvere and S. H. Schanuel, *Conceptual Mathematics*, 2nd ed. Cambridge Univ. Press, 2009.

[4] MATLAB, *Optimization Toolbox: lsqnonlin*. The MathWorks, Inc., 2024.

[5] Python, *sounddevice module*. Available: https://python-sounddevice.readthedocs.io/.